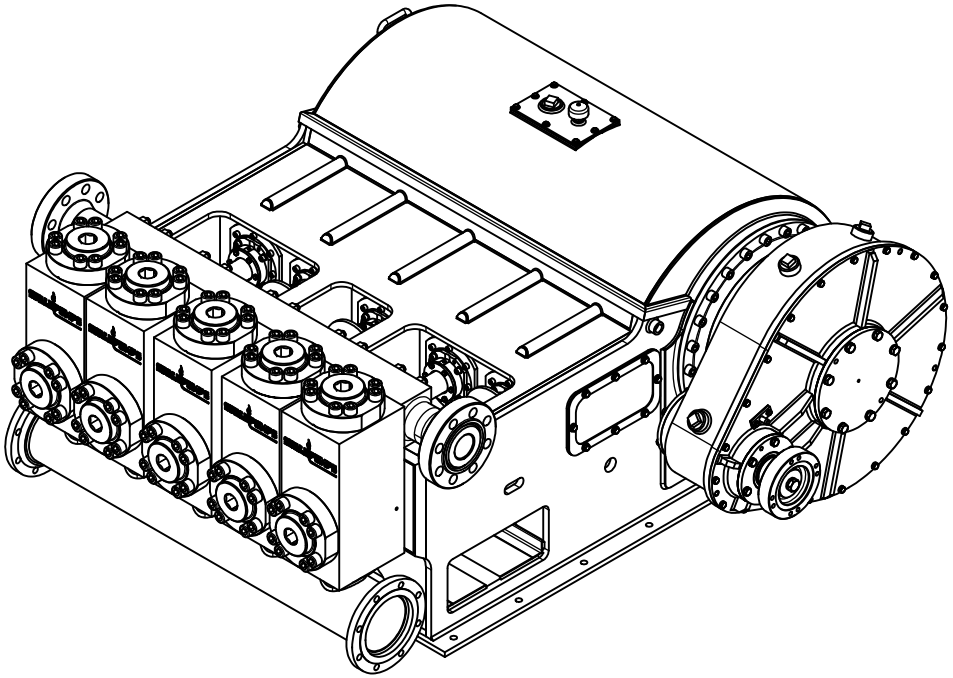

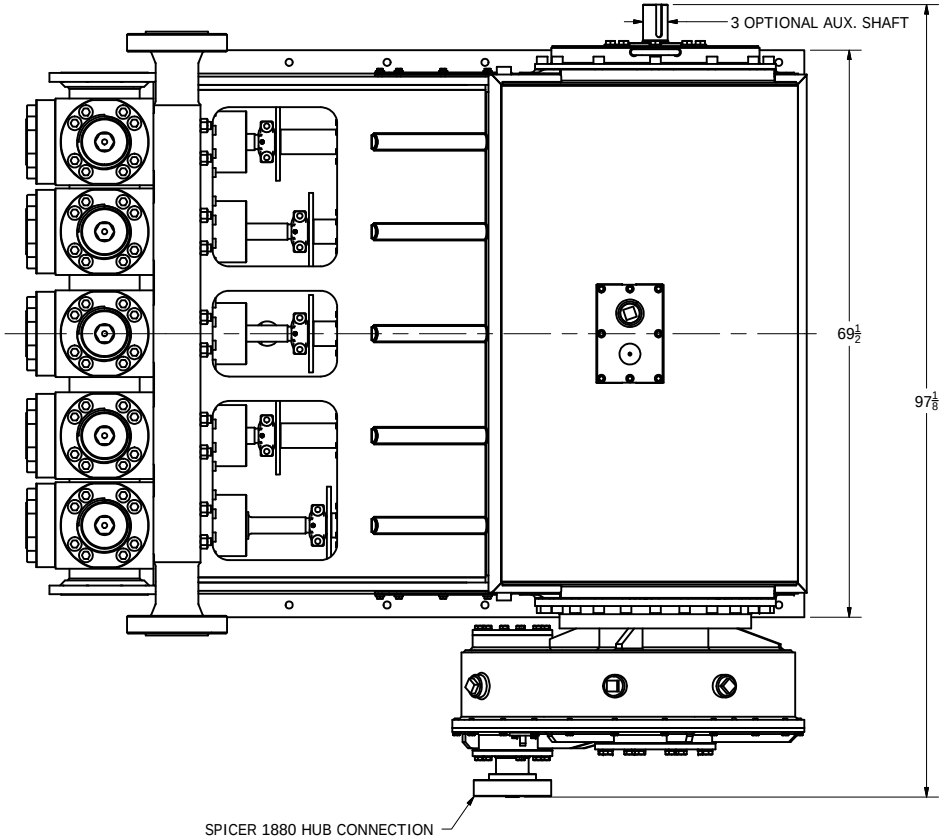

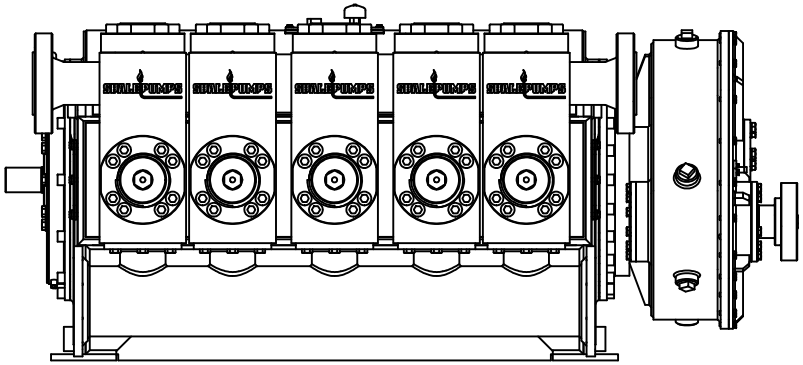

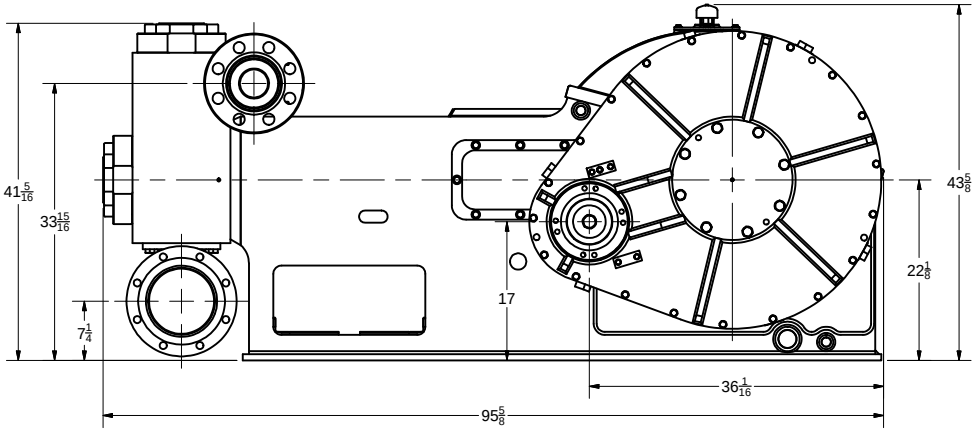

UNLESS OTHERWISE SPECIFIED			
DIMENSIONAL TOL.	DIMENSIONS ARE IN INCHES		
FRACT. ~ ±1/16	BREAK SHARP CORNERS ~ .015		
X.XXX ~ ±.005	FILLET RADII ~ .015		
X.XX ~ ±.010	CONCENTRICITY ~ .001		
X.X ~ ±.015	SQUARENESS ~ .001		
ANGLE ~ .50°	PARALLELISM ~ .001		
SURFACE RMS 250	RFS EXCEPT WHEN Ⓜ MODIFIED		
MATERIAL:			

DRAWN BY:	Jason C. Williams	5/8/2014
DESIGNED BY:	Jason C. Williams	2/13/2014
CHECKED BY:		
APPROVED BY:		
QA		

ShalePumps

TITLE

SP-800Q
INSTALLATION DRAWING

SIZE	DWG NO	REV
C	S1611002	

SCALE = NTS

SHEET 1 OF 1